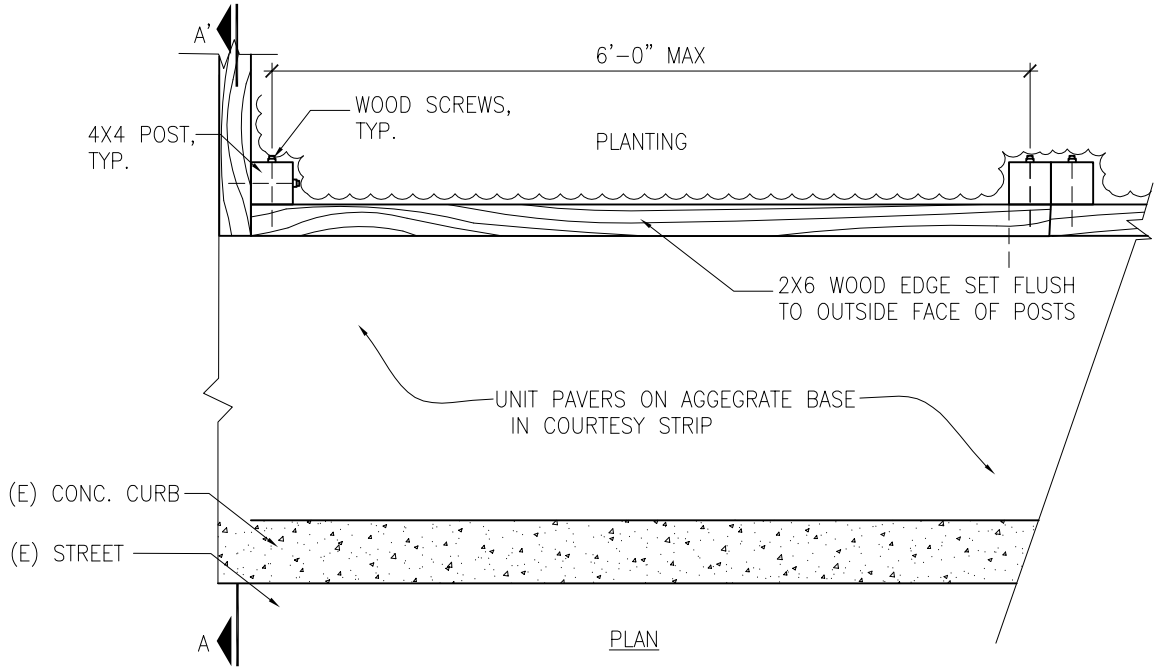

PLAN

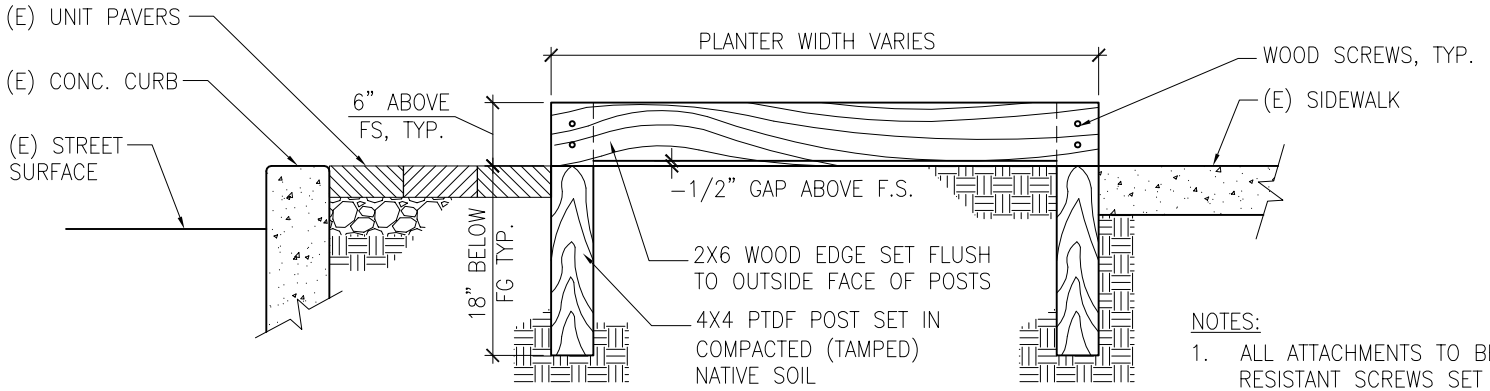

SECTION A-A'

NOTES:

1. ALL ATTACHMENTS TO BE CORROSION RESISTANT SCREWS SET FLUSH OR JUST BELOW SURFACE.
2. POSTS TO BE SET IN EXISTING SOIL, TAMPED UNTIL FIRMLY FIXED AND VERTICAL.
3. ALL WORK SHALL BE OF A QUALITY AND STANDARD EQUAL OR BETTER TO LOCAL LANDSCAPE CONTRACTORS.

PLANTING BED WITH WOOD EDGE

PLAN VIEW AND SECTION

NOT TO SCALE